Piezo Replacement on the CXI HE Sample Chamber

Ensures new Piezo stages function with the upcoming CXI HE endstation.

Dennis Quijano Alvarado – dquijano@slac.stanford.edu , S. Guillet(1), M. Hayes (1) , K. Suguitan (1). M. Dodge (1) R. Peacock (1)

SLAC NATIONAL ACCELERATOR LABORATORY | U.S. DEPARTMENT OF ENERGY | Stanford University

Proposed solution: replacement for out of service life Micronix Piezo motors in the upcoming CXI HE endstation chamber using Smaract piezo stages

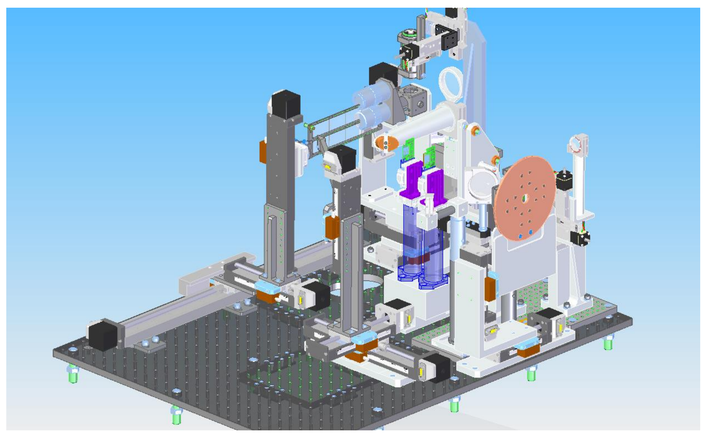

REVERSE ENGINEERING

Analize the lay out, purpose of each instrument and constrains each part has:

- Constrains:
  - Size and weight constrains.
  - Materials required to be used in a vacuum chamber.
- Purpose:
  - Replace Piezo Micronix motors with SmarAct Linear and rotational motion motors.
- Layout Analisys:
  - Each device most complement each other and allow a coherent flow.

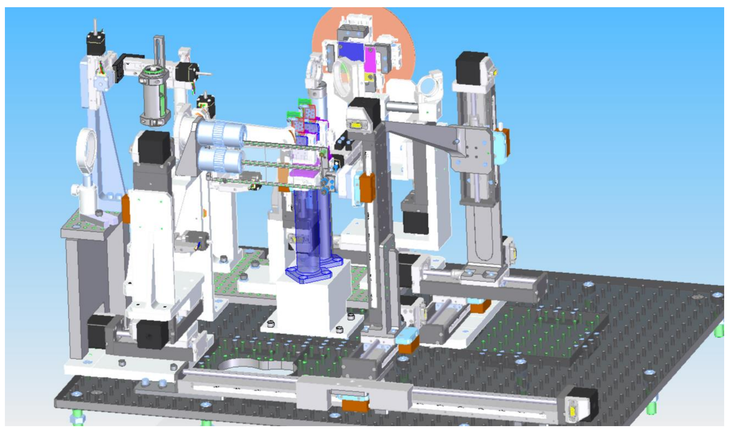

MODIFYING/DESIGNING PARTS TO INCORPORATE THE NEW PIEZO MOTORS

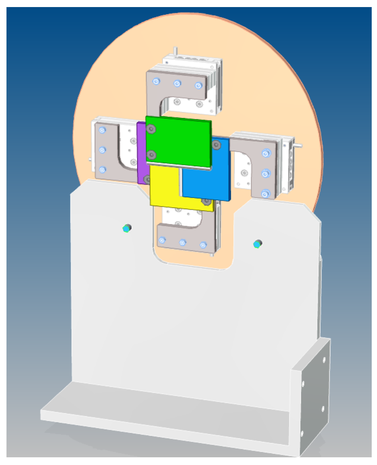

Redesigning process:

- Due to the different dimension, weight, and motion of the new linear piezo motor, a new constrain needed to be met and others needed to change.
- Multiple designs failed to meet all the requirements such as adapters that combine new and old equipment.
- New parts were created to accommodate the new Linear piezo motors while keeping the same constrains set by the bread board layout.

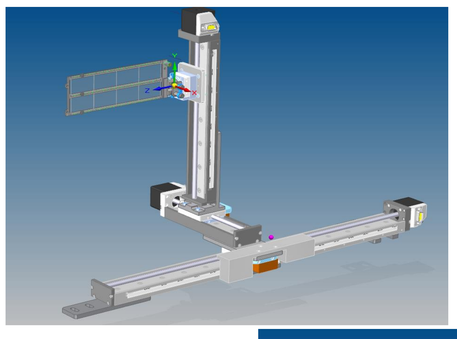

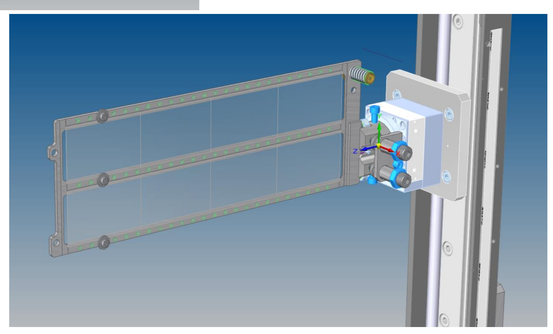

Modifying existing parts:

- Complex and innovative design create a unique solution that allows quick access to removeable equipment.
  - Magnets were used to connect the sample holder frame and the rotational piezo motor allowing for a strong stable connection.
  - It allows for quick removal by disconnecting a pin instead of removing bolts.

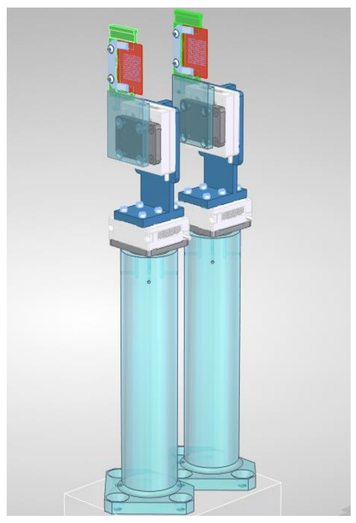

Inclusion of adapters::

- Existing parts were able to be reused with the inclusion of adapters.
  - Allows for a cost-efficient method to incorporate the new SmarAct linear motors.
  - It helps achieve height constraint due to the lack of thickness of new linear motos.

CREATING CAD DRAWINGS

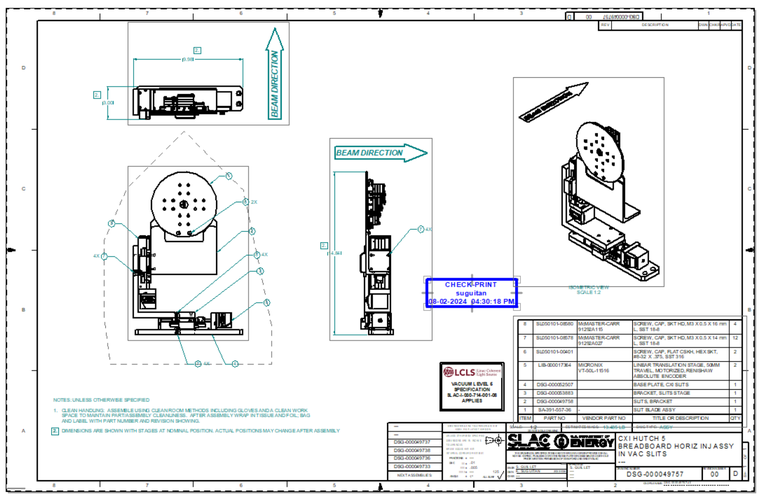

Finalizing design

- A 2D-drawing is created to allow parts to be manufactured and to provide a final visual representation of the finish product.
- Each new part has its own 2D-drawing and if the assembly is changed, a new 2D-drawing must be made.

ACKNOWLEDGEMENTS

Use of the Linac Coherent Light Source (LCLS), SLAC National Accelerator Laboratory, is supported by the U.S. Department of Energy, Office of Science, Office of Basic Energy Sciences under Contract No. DE-AC02-76SF00515

I would also like to thank Mr. Serge Guillet for his guidance and mentorship throughout this project.

REFERENCES

Liang, M., Williams, G. J., Messerschmidt, M., Seibert, M. M., Montanez, P. A., Hayes, M., Milathianaki, D., Aquila, A., Hunter, M. S., Koglin, J. E., Schafer, D. W., Guillet, S., Busse, A., Bergan, R., Olson, W., Fox, K., Stewart, N., Curtis, R., Miahnahri, A. A., & Boutet, S. (2015). The Coherent X-ray Imaging instrument at the Linac Coherent Light Source. *Journal of Synchrotron Radiation*, 22(3), 514–519. https://doi.org/10.1107/s160057751500449x